MITSUBISHI ELECTRIC

SPLIT-TYPE, HEAT PUMP AIR CONDITIONERS
SPLIT-TYPE, AIR CONDITIONERS

February 2026
No. OCB908A

PARTS CATALOG

Series PSA Floor Standing R32/R410A

Indoor unit [Model Name]	[Service Reference]
PSA-M71KA2	PSA-M71KA2
PSA-M71KA2-ET	PSA-M71KA2-ET
PSA-M100KA2	PSA-M100KA2
PSA-M100KA2-ET	PSA-M100KA2-ET
PSA-M125KA2	PSA-M125KA2
PSA-M125KA2-ET	PSA-M125KA2-ET
PSA-M140KA2	PSA-M140KA2
PSA-M140KA2-ET	PSA-M140KA2-ET

Revision:
- Service references have been revised in REVISED EDITION-A.

OCB908 is void.

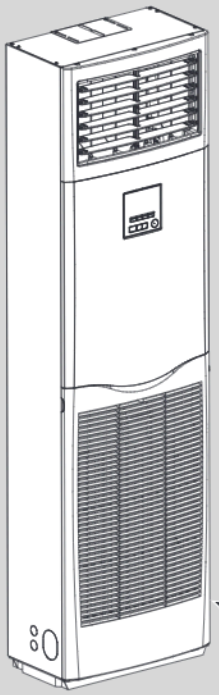

CONTENTS

1. SERVICE PARTS LIST ····· 2
2. OPTIONAL PARTS ····· 6

SERVICE MANUAL (OCH908)

Mr.SLIM

1 SERVICE PARTS LIST

PSA-M71KA2(-ET) PSA-M100KA2(-ET)
PSA-M125KA2(-ET) PSA-M140KA2(-ET)

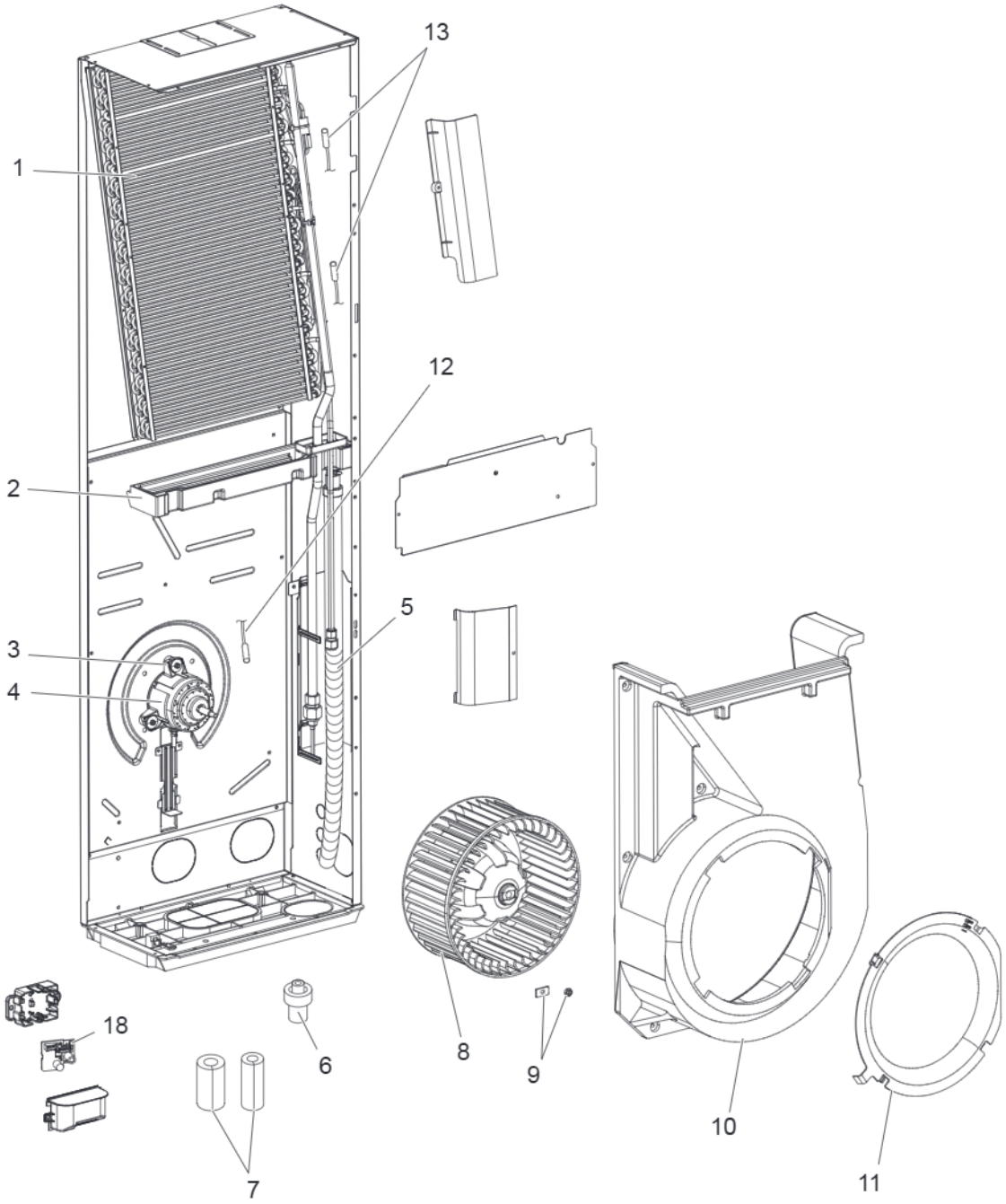

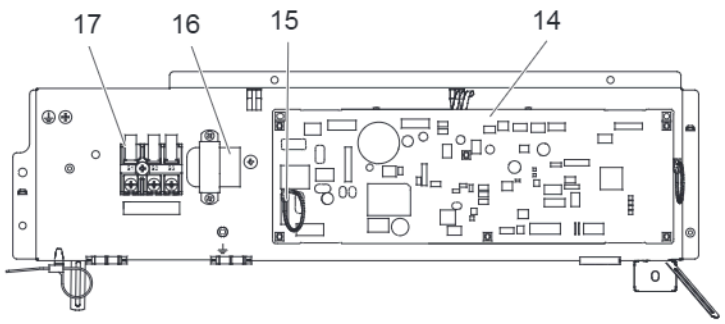

7SK01-E02ES

1. The part quantity below indicates the required number of pieces per unit.
2. The circled No. indicates that the part is not shown in the figure.

No.	Part No.	Parts name	PSA-M71KA2	PSA-M100KA2	PSA-M125KA2	PSA-M140KA2	PSA-M71KA2-ET	PSA-M100KA2-ET	PSA-M125KA2-ET	PSA-M140KA2-ET	Wiring Diagram Symbol	Remarks
1	T7W S06 480	HEAT EXCHANGER	1	1	1		1	1	1			
1	T7W S05 480	HEAT EXCHANGER				1				1		
2	R01 S03 529	DRAIN PAN	1	1	1	1	1	1	1	1		
3	R01 S04 105	RUBBER MOUNT	1				1					3PCS
3	R01 S03 105	RUBBER MOUNT		1	1	1		1	1	1		3PCS
4	T7W S04 220	FAN MOTOR	1				1				MF	Includes MOTOR MOUNT SET
4	R01 S03 220	FAN MOTOR		1	1	1		1	1	1	MF	Includes MOTOR MOUNT SET
5	R01 80G 527	DRAIN HOSE	1	1	1	1	1	1	1	1		
6	R01 E02 523	DRAIN SOCKET	1	1	1	1	1	1	1	1		
7	R01 S00 660	PIPE COVERS SET	1	1	1	1	1	1	1	1		FOR GAS&LIQUID/ CONNECT TO THE FIELD PIPING
8	R01 S03 114	SIROCCO FAN	1	1	1	1	1	1	1	1		
9	R01 11K 097	WASHER & NUT/M8	1	1	1	1	1	1	1	1		NUT & WASHER
10	R01 S03 117	SCROLL	1	1	1	1	1	1	1	1		
11	R01 E06 119	BELL MOUTH	1	1	1	1	1	1	1	1		
12	R01 HR1 202	THERMISTOR (ROOM)	1	1	1	1	1	1	1	1	TH1	
13	R01 L00 202	THERMISTOR-L/G	1	1	1	1	1	1	1	1	TH2, TH5	
14	T7W S10 310	CONTROLLER BOARD	1	1	1	1	1	1	1	1	I.B	
15	R01 E14 239	FUSE 6.3A 250V	1	1	1	1	1	1	1	1	FUSE	6.3A 250V
16	T7W F00 259	REACTOR	1	1	1	1	1	1	1	1	DCL	
17	R01 E20 246	T.B./S1.S2.S3	1	1	1	1	1	1	1	1	TB4	3P (S1,S2,S3)
18	R01 R03 366	R32 SENSOR	1	1	1	1	1	1	1	1		

PSA-M71KA2(-ET) PSA-M100KA2(-ET)
PSA-M125KA2(-ET) PSA-M140KA2(-ET)

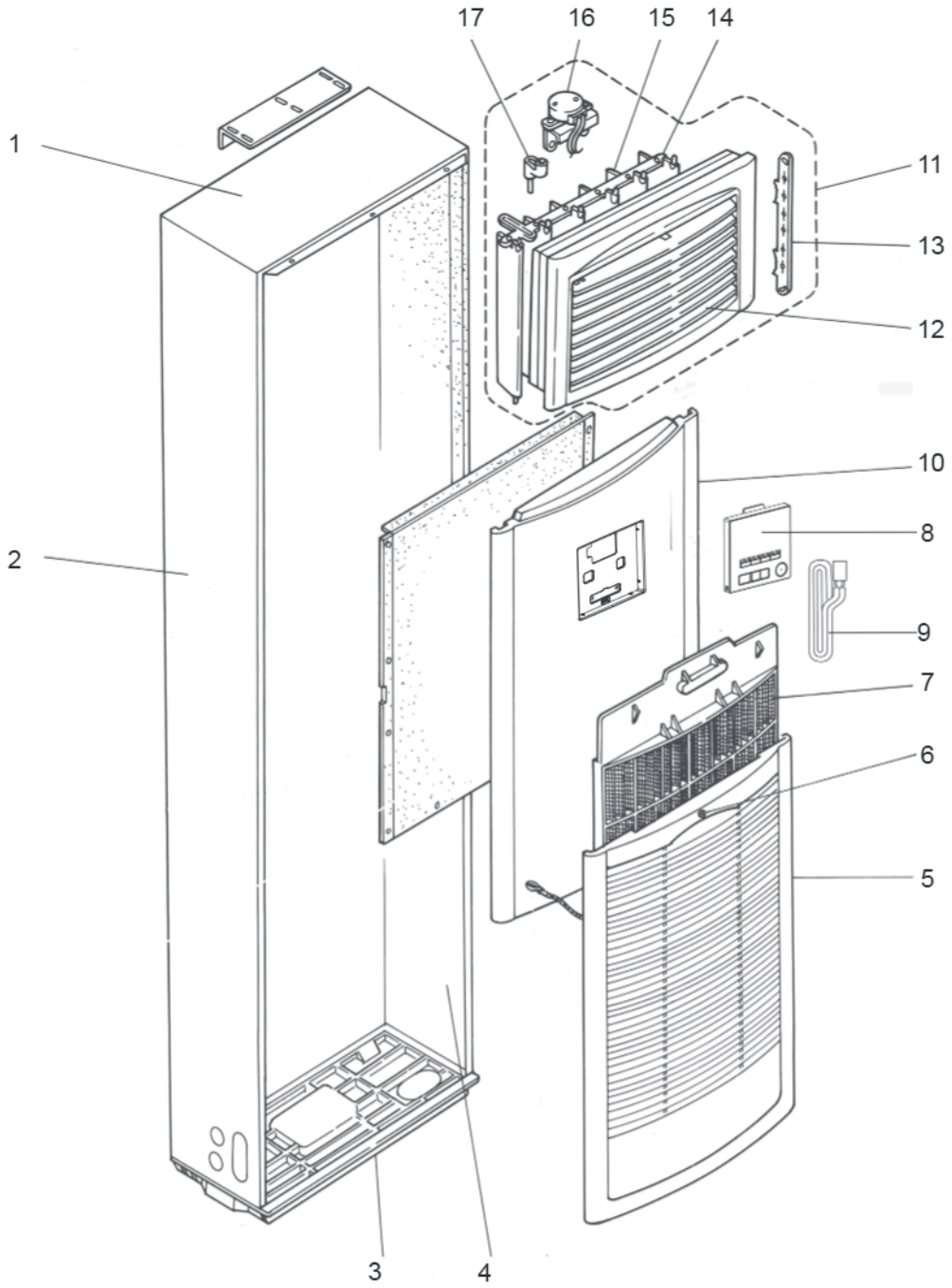

7SK00-A00ES

1. The part quantity below indicates the required number of pieces per unit.
2. The circled No. indicates that the part is not shown in the figure.

No.	Part No.	Parts name	PSA-M71KA2	PSA-M100KA2	PSA-M125KA2	PSA-M140KA2	PSA-M71KA2-ET	PSA-M100KA2-ET	PSA-M125KA2-ET	PSA-M140KA2-ET	Wiring Diagram Symbol	Remarks
1	R01 E25 641	TOP PANEL	1	1	1	1	1	1	1	1		
2	R01 E23 662	SIDE PANEL (L)	1	1	1	1	1	1	1	1		
3	R01 E38 686	BASE	1	1	1	1	1	1	1	1		
4	T7W E43 661	SIDE PANEL (R)	1	1	1	1	1	1	1	1		
5	R01 E51 691	INTAKE GRILLE	1	1	1	1	1	1	1	1		
6	R01 E11 097	PAINT SCREW (GRILLE)	1	1	1	1	1	1	1	1		FOR GRILLE
7	R01 E21 500	AIR FILTER	1	1	1	1	1	1	1	1		
8	T7W S00 200	REMOTE CONTROLLER	1	1	1	1	1	1	1	1	R.B	
9	R01 E12 305	REMOCON CABLE/XA2BLU	1	1	1	1	1	1	1	1		
10	R01 S06 651	FRONT PANEL	1	1	1	1	1	1	1	1		
11	R01 S03 003	S. LOUVER ASSY	1	1	1	1	1	1	1	1		
12	R01 E03 035	GUIDE VANE (H)	8	8	8	8	8	8	8	8		
13	R01 E03 021	VANE ARM (H)	1	1	1	1	1	1	1	1		
14	R01 E04 019	VANE ARM (V)	1	1	1	1	1	1	1	1		
15	R01 E05 038	GUIDE VANE (V)	6	6	6	6	6	6	6	6		
16	R01 S03 222	LOUVER MOTOR (ML)	1	1	1	1	1	1	1	1	ML	
17	R01 E01 060	CRANK	1	1	1	1	1	1	1	1		

2 OPTIONAL PARTS

Parts name	Parts No.
Power supply terminal kit	PAC-SG96HE-E
Wi-Fi Interface	MAC-587IF-E
Remote sensor	PAC-SE41TS-E
Remote ON/OFF adapter	PAC-SE55RA-E
Remote operation adapter	PAC-SF40RM-E
Remote display adapter	PAC-SA88HA-E
Signal sender	PAR-SL103A-E
Signal receiver	PAR-SA9CA-E

MITSUBISHI ELECTRIC CORPORATION

HEAD OFFICE: TOKYO BUILDING, 2-7-3, MARUNOUCHI, CHIYODA-KU, TOKYO 100-8310, JAPAN

©Copyright 2025 MITSUBISHI ELECTRIC CORPORATION
Published: Feb. 2026 No. OCB908A
Published: Nov. 2025 No. OCB908
Made in Japan

Specifications are subject to change without notice.